CONTECH®
ENGINEERED SOLUTIONS
A QUIKRETE® COMPANY

HEL-COR® Pipe-Arch

CONTECH®
PIPE SOLUTIONS

HEL-COR® Pipe-Arch

HEL-COR® Pipe-Arch is a corrugated steel pipe shaped to a span greater than the rise. Pipe-Arch allows for greater flows at lower elevations while providing for a lower profile culvert when soil cover is limited. Pipe-Arch design distributes the area horizontally to provide adequate capacity without raising the grade.

Hydraulic Considerations

At the 12″ elevation, a 36-inch diameter corrugated steel pipe-arch equivalent will provide **nearly 1.5 times the water flow** as a 36-inch diameter round pipe.

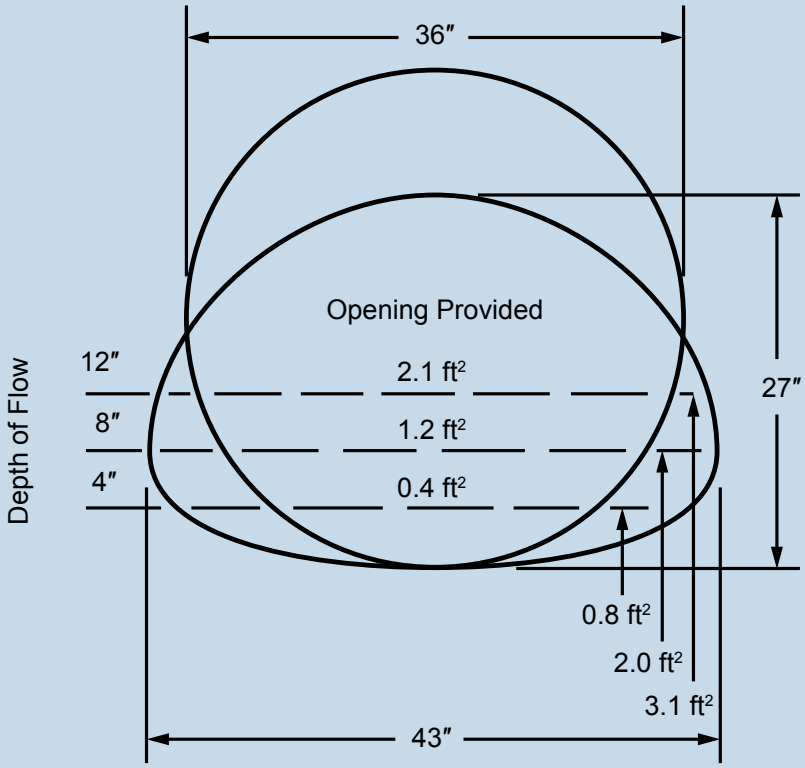

Full-Flow Data for HEL-COR® Pipe-Arch

CORRUGATIONS 2 2/3" X 1/2"				CORRUGATIONS 3" x 1" and 5" x 1"			
Diameter (in)	Pipe-Arch Equiv. Size (in)	Waterway Area (ft^2)	Hydraulic Radius, A/πD (ft)	Diameter (in)	Pipe-Arch Equiv. Size (in)	Waterway Area (ft^2)	Hydraulic Radius, A/πD (ft)
15	17 x 13	1.1	0.280	54	60 x 46	15.6	1.104
18	21 x 15	1.6	0.340	60	66 x 51	19.3	1.230
21	24 x 18	2.2	0.400	66	73 x 55	23.2	1.343
24	28 x 20	2.9	0.462	72	81 x 59	27.4	1.454
30	35 x 24	4.5	0.573	78	87 x 63	32.1	1.573
36	42 x 29	6.5	0.690	84	95 x 67	37.0	1.683
42	49 x 33	8.9	0.810	90	103 x 71	42.4	1.800
48	57 x 38	11.6	0.924	96	112 x 75	48.0	1.911
54	64 x 43	14.7	1.040	102	117 x 79	54.2	2.031
60	71 x 47	18.1	1.153	108	128 x 83	60.5	2.141
66	77 x 52	21.9	1.268	114	137 x 87	67.4	2.259
72	83 x 57	26.0	1.380	120	142 x 91	74.5	2.373

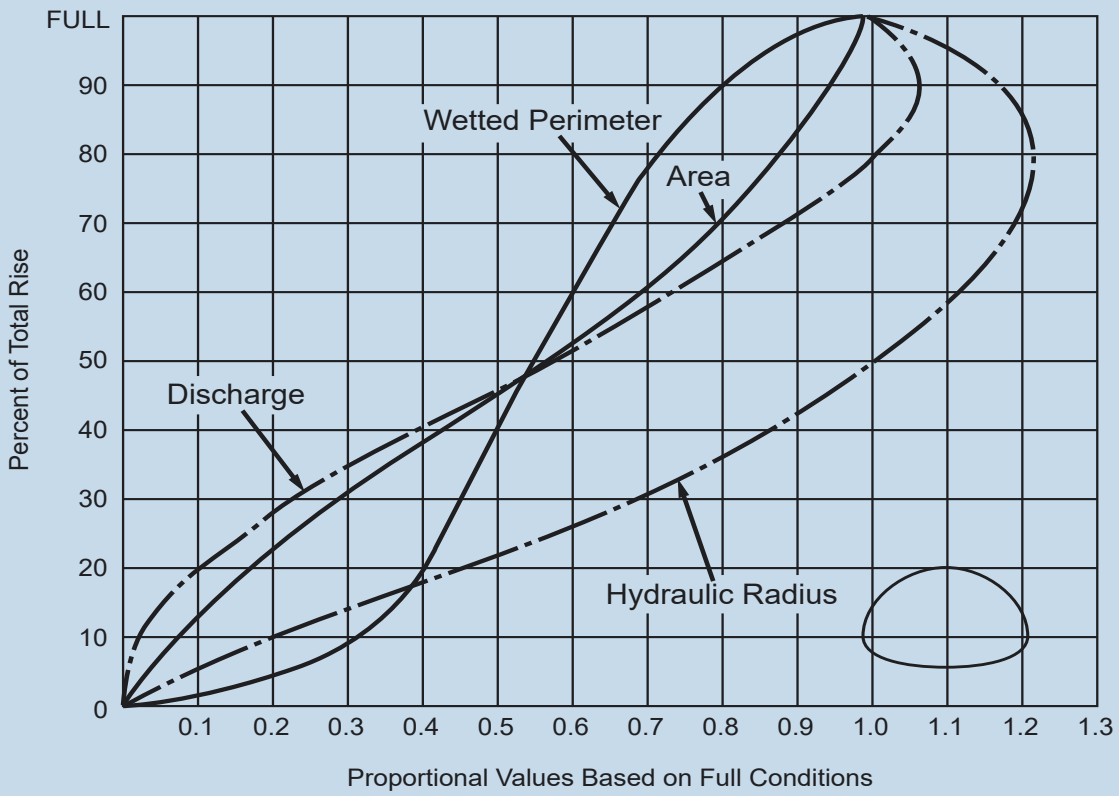

HEL-COR® Pipe-Arch

Product Availability

From a 17″ span X 13″ rise to 142″ span X 91″ rise, HEL-COR® Pipe-Arch is available in galvanized steel, aluminized steel, polymer-coated steel, bituminous-coated steel and aluminum alloy.

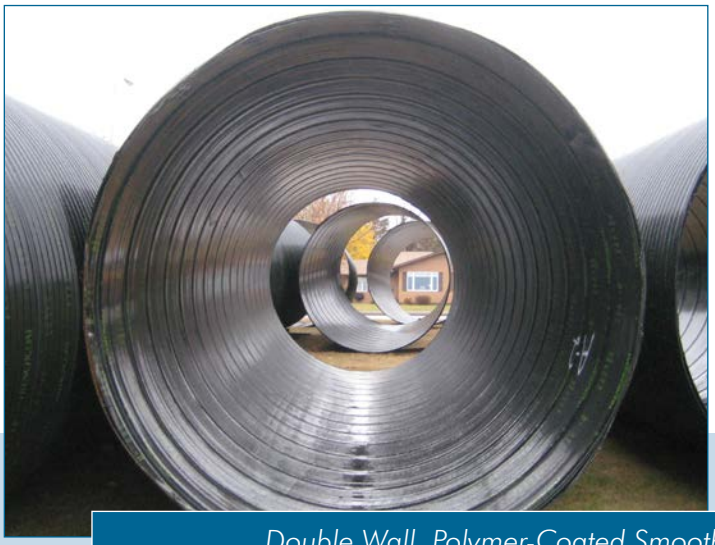

Double Wall, Polymer-Coated Smooth Cor™ shown above is also available in both round and pipe-arch shapes.

Applications

- Drainage culverts, canals, and ditch enclosures
- Storm sewers and drainage pipe
- Stormwater detention and infiltration
- Rehabilitating storm sewers, irrigation pipe and small culverts
- Small span bridges

Large diameter Pipe-Arch manufactured in a chain arch press.

Heights of Cover for HEL-COR® Pipe-Arch

H 20 and H 25 Live Loads for 2 2/3″ x 1/2″ Pipe-Arch				
Size		Minimum Gage (in)	Minimum Cover (in)	Maximum Cover (ft)
Diameter (in)	Span x Rise (in)			2 Tons/ft² Corner Bearing Pressure
15	17 x 13	0.064	12	16
18	21 x 15	0.064	12	15
21	24 x 18	0.064	12	15
24	28 x 20	0.064	12	15
30	35 x 24	0.064	12	15
36	42 x 29	0.064	12	15
42	49 x 33	0.064*	12	15
48	57 x 38	0.064*	12	15
54	64 x 43	0.079*	12	15
60	71 x 47	0.109*	12	15
66	77 x 52	0.109*	12	15
72	83 x 57	0.138*	12	15

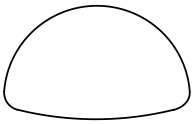

* These values are based on the AISI Flexibility Factor limit (0.0433 x 1.5) for pipe-arch.

H 20 and H 25 Live Loads for 3″ x 1″ Pipe-Arch					
Size			Minimum Gage (in)	Minimum Cover (in)	Maximum Cover (ft)
Diameter (in)	Min. Span (in)	Max. Rise (in)			2 Tons/ft² Corner Bearing Pressure
48	53 (-2.4)	41 (+2.4)	0.079	12	25
54	60 (-2.7)	46 (+2.7)	0.079	15	25
60	66 (-3.0)	51 (+3.0)	0.079	15	25
66	73 (-3.3)	55 (+3.3)	0.079	18	24
72	81 (-3.6)	59 (+3.6)	0.079	18	21
78	87 (-4.4)	63 (+4.4)	0.079	18	20
84	95 (-4.8)	67 (+4.8)	0.079	18	20
90	103 (-5.2)	71 (+5.2)	0.079	18	20
96	112 (-5.6)	75 (+5.6)	0.079	21	20
102	117 (-5.9)	79 (+5.9)	0.109	21	19
108	128 (-6.4)	83 (+6.4)	0.109	24	19
114	137 (-6.9)	87 (+6.9)	0.109	24	19

H 20 and H 25 Live Loads for 5″ x 1″ Pipe-Arch					
Size			Minimum Gage (in)	Minimum Cover (in)	Maximum Cover (ft)
Diameter (in)	Min. Span (in)	Max. Rise (in)			2 Tons/ft² Corner Bearing Pressure
54	60 (-2.7)	46 (+2.7)	0.109	18	21
60	66 (-3.0)	51 (+3.0)	0.109	18	21
66	73 (-3.3)	55 (+3.3)	0.109	18	21
72	81 (-3.6)	59 (+3.6)	0.109	18	21
78	87 (-4.4)	63 (+4.4)	0.109	18	20
84	95 (-4.8)	67 (+4.8)	0.109	18	20
90	103 (-5.2)	71 (+5.2)	0.109	18	20
96	112 (-5.6)	75 (+5.6)	0.109	21	20
102	117 (-5.9)	79 (+5.9)	0.109	21	19
108	128 (-6.4)	83 (+6.4)	0.109	24	19
114	137 (-6.9)	87 (+6.9)	0.109	24	19
120	142 (-7.1)	91 (+7.1)	0.138	24	19

Larger sizes are available in some areas of the United States. Check with your local Contech representative. Negative and positive numbers listed with span and rise dimensions are negative and positive tolerances, no tolerance in opposite direction.

HEL-COR® Pipe-Arch

End Treatments Available

A 64′ long piece of HEL-COR® Pipe-Arch with beveled ends ready to ship to the project site. Check your local Contech representative for availability of special lengths.

Incorporating a CHS® (culvert headwall system) can improve the hydraulic capacity of Pipe-Arch culverts.

THE CONTECH ADVANTAGE

For more than a century, Contech has provided innovative, cost-effective site solutions to engineers, contractors, and developers on projects across North America. With a portfolio that includes bridges, drainage, erosion control, retaining wall, sanitary sewer and stormwater management products, our team is ready to help you to design, build, and support your next project.

Supporting every aspect of your project, from concept to installation, Contech is here to help! Our extensive network of local experts offers you comprehensive project management, technical support, and customer service.

AGENCY/REGULATORY GUIDANCE

Our team is ready to provide you with expert advice and assistance on local regulatory requirements, resulting in faster approvals.

SOLUTION DEVELOPMENT

Our engineers can review your requirements, weigh all options, and recommend the optimal solution to integrate with your site designs.

TECHNICAL EXPERTISE

Our engineers assist by providing product-specific engineering calculations such as hydraulics, buoyancy, foundation reactions, and unit sizing.

COST ESTIMATES

We can quickly provide engineer's cost estimates to assist with your solution selection process.

SITE SPECIFIC DRAWINGS

Our engineers can provide site-specific drawings for proposals, project meetings, and submittals, helping you be more efficient with your time.

ON-SITE ASSISTANCE

Contractors know time is money, so we provide preconstruction meetings, delivery coordination, and on-site installation support to ensure a timely, smooth installation.

CONTECH®
ENGINEERED SOLUTIONS
A QUIKRETE® COMPANY

MANUFACTURING AMERICA'S INFRASTRUCTURE™

We manufacture engineered solutions for complex civil infrastructure challenges and create lasting value for project stakeholders through unrivaled expertise, support and workmanship.

To us, it's about being a trusted partner for project owners, engineers and customers while doing meaningful work that helps build our communities.

PIPE SOLUTIONS

STORMWATER SOLUTIONS

STRUCTURE SOLUTIONS

For more information, we have representatives for all 50 states.
Please call 800-338-1122 or visit www.conteches.com.

NOTHING IN THIS CATALOG SHOULD BE CONSTRUED AS A WARRANTY. APPLICATIONS SUGGESTED HEREIN ARE DESCRIBED ONLY TO HELP READERS MAKE THEIR OWN EVALUATIONS AND DECISIONS, AND ARE NEITHER GUARANTEES NOR WARRANTIES OF SUITABILITY FOR ANY APPLICATION. CONTECH MAKES NO WARRANTY WHATSOEVER, EXPRESS OR IMPLIED, RELATED TO THE APPLICATIONS, MATERIALS, COATINGS, OR PRODUCTS DISCUSSED HEREIN. ALL IMPLIED WARRANTIES OF MERCHANTABILITY AND ALL IMPLIED WARRANTIES OF FITNESS FOR ANY PARTICULAR PURPOSE ARE DISCLAIMED BY CONTECH. SEE CONTECH'S CONDITIONS OF SALE (AVAILABLE AT WWW.CONTECHES.COM/COS) FOR MORE INFORMATION.

© 2026 Contech Engineered Solutions LLC , a QUIKRETE Company
All rights reserved. Printed in USA.

HEL-COR Pipe Arch Bro 10/26 MC DIGITAL