CONTECH®
ENGINEERED SOLUTIONS
A QUIKRETE® COMPANY

Corrugated Metal Pipe Solutions

CONTECH®
PIPE SOLUTIONS

Contech® Corrugated Metal Pipe

Solutions for severe-to-normal conditions

Coast-to-coast, engineers and contractors rely on Contech Corrugated Metal Pipe for culverts, storm sewers, small bridges, stormwater detention systems, conduits and windmill foundations. No other type of drainage structure offers the range of structural strength that's available with Corrugated Metal Pipe—it performs where rigid pipe fails.

Contech Engineered Solutions LLC manufactures to repeatable and exacting standards HEL-COR® and ULTRA FLO® pipe—which has a 0.012 Manning's "n"—in galvanized, Aluminized Steel Type 2, polymer-coated and aluminum.

Numerous industry standards for pipe configurations, coatings and linings have been conceived and developed by Contech. That is how we have earned the reputation as the world leader in pipe design and innovation.

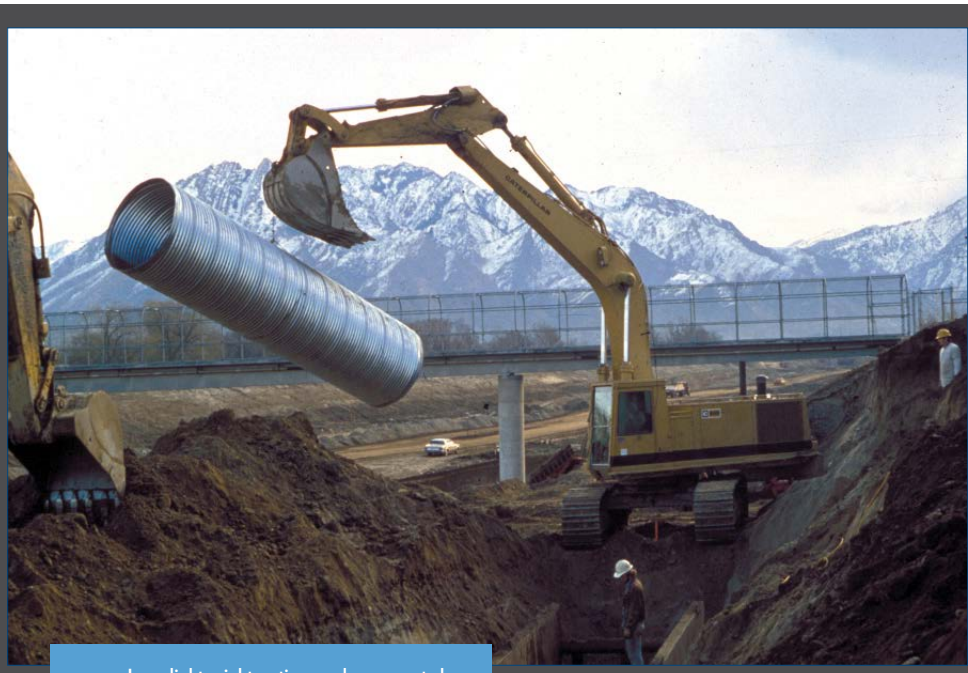

Long lightweight sections make corrugated steel pipe easy to install.

Corrugated Steel Pipe . . . The Core of Strength

Corrugated steel pipe is similar to the superstructure of a building in that it supports the interior walls and gives structure to the facade. Steel is the proven, strong-shouldered material that is coated with zinc, Aluminized Steel Type 2, tough polymer or asphalt to increase durability for prolonged design life. Corrugated steel pipe is the strength at the core of all coatings and linings.

Contech's Corrugated Steel Pipe provides the power and tenacity to your culverts, storm sewers and stormwater detention systems to withstand severe environmental conditions and burial depths. We offer coatings and linings to increase the life of installations up to 100 years as well as provide products with a Manning's "n" equivalent to other smooth wall drainage products.

Two primary shapes
Full-round pipe is recommended for most applications. However, for limited headroom conditions, Contech produces a pipe-arch shape. The low, wide pipe-arch design distributes the area horizontally to provide adequate capacity without raising the grade.

Corrugations and wall thicknesses
Both Contech Pipe and Pipe-Arch are produced in a variety of gages, which are available with either helical or annular corrugations. Contech HEL-COR Pipe (helical corrugation) is furnished with continuous locked seam, and with rerolled annular ends (also available in non-rerolled ends upon request). Contech riveted pipe is furnished with annular corrugations only.

Corrugations include $1\text{-}^{1}/_{2}$" x $^{1}/_{4}$" and $2\text{-}^{2}/_{3}$" x $^{1}/_{2}$" for economical and efficient metal use in small diameters;
3" x 1" and 5" x 1" offer high sectional properties in large-diameter pipe.

The wide variety of corrugations and thicknesses permits selection of materials for a balanced design to meet specific jobsite conditions. Each project can be designed individually for the most cost-effective combination of corrugations, thicknesses, sizes, materials and installations, maximizing your investment on a job-by-job basis. For guidance, call your local Contech sales representative.

HEL-COR® Corrugated Steel Pipe

Helically corrugated HEL-COR steel pipe, available in round and pipe-arch shapes, has over 65 years of proven performance. It is manufactured with continuous locked seams with annular corrugated ends to use with soil-tight HUGGER® Bands.

Typical applications are culverts, stormwater detention systems, small bridges, conduits and storm sewers. A wide variety of wall thicknesses (gages), corrugations, diameters and pipe section lengths permit a choice of materials to meet specific job site requirements.

Durability requirements are addressed by a wide choice of materials: galvanized steel, aluminized steel type 2 (ALT2) and polymer-coated steel. For increased hydraulic efficiency, HEL-COR Smooth Cor™ has a steel lining.

Standard fittings include tees, wyes, elbows, saddle branches, reducers and manifolds for detention systems. Manholes and catch basins are fabricated to meet specific job requirements.

As a construction shaft liner, HEL-COR Pipe, with or without ring beam stiffeners, can be supplied in up to 171 inch diameters.

Over 60 years of proven performance

Reference Specifications		
Material	Galvanized Steel	AASHTO M218 ASTM A 929
	Aluminized Steel Type 2 (ALT2)	AASHTO M274 ASTM A 929
	Polymer-Coated Steel	AASHTO M246 ASTM A 742 ASTM A 849
	Aluminum Alloy	AASHTO M197 ASTM B 744
Pipe	Steel (Galvanized and ALT2 HEL-COR and ULTRA FLO)	AASHTO M36 ASTM A 760
	Steel (Polymer-Coated HEL-COR, ULTRA FLO, and Smooth Cor)	AASHTO M36 AASHTO M245 ASTM A 762
	Aluminum (Corlix, ULTRA FLO)	AASHTO M196 ASTM B 745
Coating/Lining	Asphalt	AASHTO M190 ASTM A 849
Design	Steel (HEL-COR, ULTRA FLO, Smooth Cor)	AASHTO Section 12* ASTM A 796
	Aluminum (Corlix, ULTRA FLO)	AASHTO Section 12* ASTM A 790
Installation	Steel (HEL-COR, ULTRA FLO, Smooth Cor)	AASHTO Section 26* ASTM A 798
	Aluminum (Corlix, ULTRA FLO)	AASHTO Section 26* ASTM A 788

*AASHTO LRFD Bridge Design Specification and AASHTO Standard Specification for highway bridges.

CORLIX® Aluminum Pipe

Long Service Life ...

Contech's CORLIX Aluminum Pipe provides a predictable service life of more than 75 years when installed in the recommended soil/water environment. It is ideal for municipal storm sewers, underground stormwater detention systems or any standard drainage project that must withstand corrosive environments.

Lower Installed Costs ...

Lower initial cost begins with CORLIX pipe's weight. It weighs only 1/35 as much as reinforced concrete. Lighter weight means easier installation. Trench width and depths are reduced due to the smaller outside diameters, resulting in time and cost savings for both excavation and backfill.

Single lengths up to 40 feet ensure more accurate pipe alignment at time of placement and through the life of the system. Longer lengths save installation time with fewer joints. Even more footage per truckload is possible with bundles of nested pipe—and unloading time is minimal.

A CORLIX underground detention system with prefabricated stubs eliminates the need for forming concrete junction boxes.

Predictable service life of more than 75 years

CORLIX Aluminum Pipe can be installed in salt water environments.

ULTRA FLO®

smooth interior corrugated storm sewer pipe

Manning's "n" of 0.012 … Equal to Concrete Pipe

ULTRA FLO has over 25 years of proven performance on municipal, transportation, residential development, shopping center and airport storm sewer and stormwater detention projects. ULTRA FLO's rapid acceptance is based on its Manning's "n" of 0.012, structural strength and faster/lower-cost installation than concrete. Plus, ULTRA FLO is available in galvanized steel, Aluminized Steel Type 2, polymer-coated and aluminum to meet a wide variety of environmental and service life requirements. For projects with limited headroom, ULTRA FLO is available in pipe-arch.

Superior Hydraulics

Research at Utah State University shows that ULTRA FLO Storm Sewer Pipe Systems are hydraulically equivalent to reinforced concrete pipe. The Water Research Laboratory performed hydraulic tests on ULTRA FLO spiral-rib pipe with $^3/_4$" x $^3/_4$" x 7 $^1/_2$" continuous ribs. At full flow, the Manning's "n" was 0.012 (Report No. 1277 and 1278, *2002*). For further reference, see FHWA Hydraulic Design Series No. 5, *December 1996*.

ULTRA FLO is one of the most hydraulically efficient storm sewer systems available because of its smooth interior surface and longer lengths, resulting in fewer joints and hydraulically efficient prefabricated junctions: elbows, manholes and catch basins.

Installed Cost Savings

Millions of feet of ULTRA FLO have been installed in thousands of storm sewer projects nationwide, providing significant cost savings. Because steel ULTRA FLO weighs less than 10% of concrete pipe, handling and installation costs are greatly reduced. Aluminum ULTRA FLO has only $^1/_{35}$ the weight of concrete pipe. Lower labor costs also result from fast and easy joining. Contech QUICK STAB® joints or coupling bands do not require special skills or tools. Twenty-foot standard lengths mean fewer joints and faster laying. And, longer lengths are available on special order. ULTRA FLO's smaller outside diameter permits a reduction in trench widths and depths, providing time and cost savings for both excavation and backfilling operations.

Shop-fabricated fittings save installation time in the field while providing hydraulically efficient junctions.

Reduced excavation—because of ULTRA FLO's smaller outside diameter—lowers cost.

ULTRA FLO's smooth interior provides superior hydraulic capacity while the exterior box ribs provide structural strength.

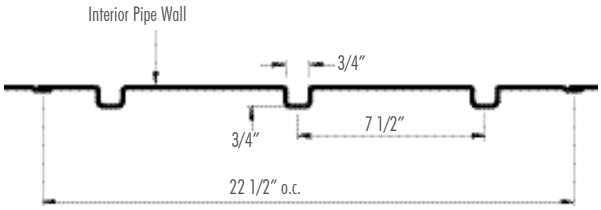

External Rib Profile

Smooth Cor™

Steel-lined corrugated steel pipe Manning's "n" = 0.012

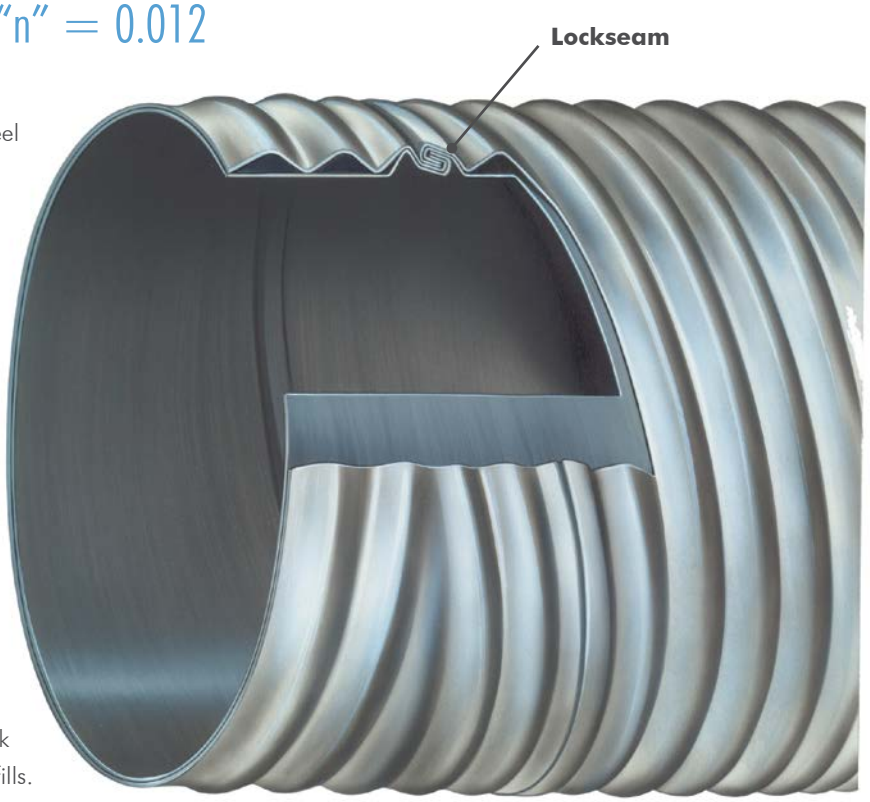

Smooth Cor double wall pipe consists of a standard corrugated steel pipe as its structural exterior shell and a hydraulically smooth steel liner, which provides an excellent alternative to reinforced concrete pipe in weak soils and steep slopes. The liner is continuously attached to the exterior shell along the lock seam. Both the interior liner and exterior shell are coated on both sides with polymer coating. Smooth Cor is also available in pipe-arch shape. Smooth Cor is covered by AASHTO M36, Type IA, Pipe Arch is Type IIA.

Excellent hydraulics

Smooth Cor, with its smooth interior surface, is hydraulically superior to conventional corrugated steel pipe and with fewer joints and tough polymer coating, outperforms reinforced concrete pipe.

Smooth Cor, with its long lengths, light weight, and beam strength, is superior to concrete pipe in many difficult situations such as weak soils, poor subsurface drainage conditions, steep slopes and high fills. It should be specified as an alternative under normal site conditions and specified exclusively under very difficult situations that demand the strength of CSP with positive joints and a hydraulically efficient smooth liner.

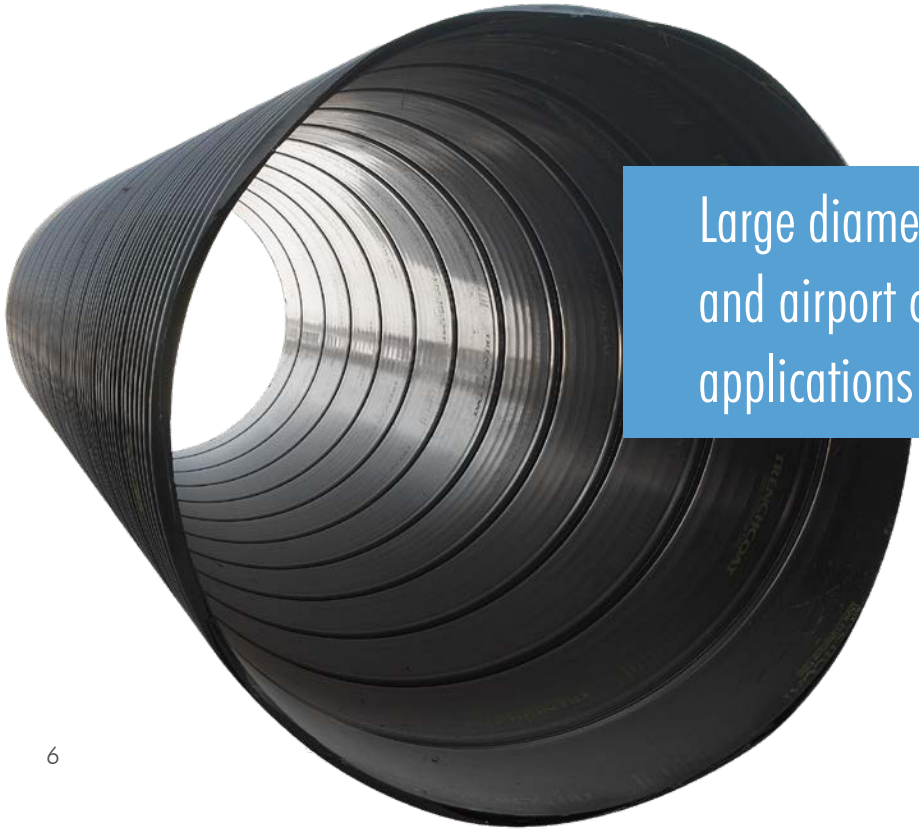

Large diameter storm sewers, DOT projects and airport construction are ideal applications for Smooth Cor.

Slotted Drain™

intercepts 50% more runoff

Contech Slotted Drain is a practical, continuous opening inlet for the efficient removal of surface water on streets and highways. The grate on a standard 20-foot length of Slotted Drain will intercept up to 50% more runoff than most standard 2′ x 2′ grate inlets. In parking lots, Slotted Drain removes sheet flow without complex multiple grades or water channeling devices like asphalt dikes, berms and curbs.

Slotted Drain is fabricated from corrugated steel pipe cut along a longitudinal axis with a trapezoidal or straight-sided grate. Reinforcing spacer plates are welded in place to form a 1 $^1/_2$″-inch-wide slot opening. The slot collects runoff and channels it to the pipe below.

Variable height grates (straight-sided) can be supplied for installation on flat grades. Generally, the grade built into variable-height grates is a maximum of 1%.

See Variable Height Grate Drawing 1008732

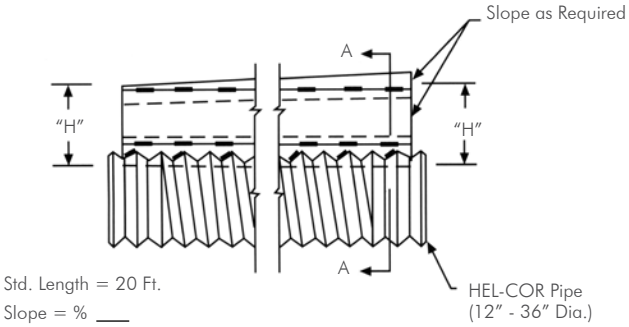

Side View

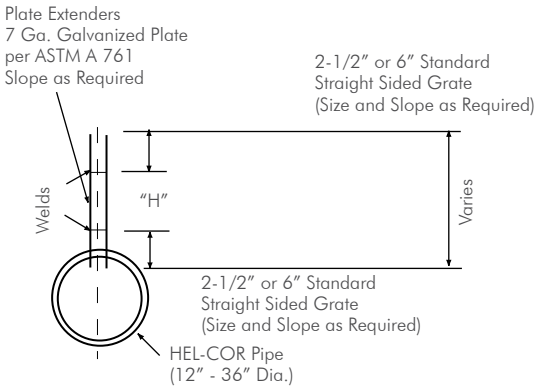

Section A-A

Slotted Drain Applications

- Curb inlets
- Airport aprons, taxiways, hangars and de-icing areas
- Railroad intermodal facilities with heavy wheel loads
- Shoulder and median barrier drains
- Inlet system across driveways
- Pedestrian thoroughfares, malls and bicycle paths
- Parking lots and other continuous paved surfaces

Trapezoidal design of the grate prevents clogging and debris build-up.

Pipe Coating Alternatives

Galvanized Steel Pipe

Pre-galvanizing is the most widely used and most economical metallic coating for corrugated steel pipe. Pre-galvanizing protects and extends service life. In addition to forming a physical barrier against corrosion, the zinc coating sacrifices itself slowly by galvanic action to protect the base steel. This action continues as long as any zinc remains. The design life of galvanized pipe—installed in a corrosive environment—can be extended by coating the pipe with asphalt.

Aluminized Type 2 (ALT2) Steel Pipe

Corrugated pipe is fabricated from steel that has been hot-dipped in commercially pure aluminum. Over 50 years of field-testing confirms that ALT2 corrugated steel pipe offers 75 years or more of maintenance free service life in the environmental ranges of pH 5-9 with resistivities as low as 1,500 ohm-cm.

Excellent Barrier Protection

Aluminum forms a passive aluminum oxide reaction product film that adds to the service life by providing good barrier protection. This passive film forms rapidly and maintains better protection over a wider environmental range than zinc reaction product films. The aluminum oxide passive film is effective in both hard and soft water.

The passive oxide film will endure as long as the free aluminum coating layer lasts. When this layer is eventually penetrated, there is an underlying hard, thick alumimum-iron alloy layer that provides further corrosion protection plus some significant abrasion protection.

In the environmental range of pH 5-9 and resistivities as low as 1,500 ohm-cm, 43-year old field installations have shown that the multiple layer coating protection of Aluminized Steel Type 2 provides a service life 3 to 10 times longer than plain galvanized steel.

In some cases, the pH/ resistivity ranges may be extended somewhat as is the case in arid regions where moisture availability is generally a controlling factor, and satisfactory service life may be realized at soil resistivities somewhat below the 1,500 ohm-cm lower limit. In wetter climates, satisfactory service life may be realized as soil pH values below the 5.0 lower limit when resistivities are relatively high.

Polymer-Coated Steel Pipe offers 100-Year protection against abrasion and corrosion

Contech's Corrugated Steel Pipe (CSP) with heavy-gage polymer coating offers long-term protection for storm drains and culverts. Even under harsh conditions, Polmer coating protects against abrasion and corrosion to provide at least 100 years of service life.

This tough film, bonded to both the inside and outside of Contech's galvanized CSP, serves as a protective barrier—resisting corrosion from acids, salts and alkalis found in today's storm sewers and culverts.

The film has been subjected to chemical resistance tests such as ASTM A 543 and A 742. These tests and others, including exposure to detergent, 10% sodium hydroxide (pH 14), 10% sodium chloride, 10% hydrochloric acid (pH less than 0.1) and 10% ammonium hydroxide dramatically demonstrate the corrosion resistance of the polymer film.

NCSPA Research

The National Corrugated Steel Pipe Association (NCSPA) has conducted field studies of corrugated steel pipe with heavy-gage protective film—under various environmental conditions — at numerous sites throughout the United States.

From this research, NCSPA predicts the following service life expectancies:

Service Life	pH Levels	Min. Resistivity
100 Years	5-9	1,500 ohm.cm
75 Years	4-9	750 ohm.cm
50 Years	3-12	250 ohm.cm

Polymer coating is available on corrugated steel pipe and pipe-arch as well as hydraulically superior products—such as Smooth Cor and ULTRA FLO. Your local Contech sales representative can provide details on availability.

A polymer-coated corrugated steel pipe system also provides excellent performance in methane gas recovery applications in landfills. The CSP is structurally capable of handling the heavy and settling loads in a landfill and the polymer coating provides added corrosion resistance to the pipe.

If you have a project with corrosive soil conditions such as bluish-gray or green clays or other tough environmental conditions, CSP coated with polymer protective coating may be the solution to your drainage problems.

Installed in 1975 by the Arkansas State Highway Department as a test installation, this 66"-diameter polymer-coated corrugated steel pipe remains in excellent condition. After more than 40 years of exposure to pH 5.5, sediment and moderate abrasion, the triple-barreled structure keeps on performing. Also, test sites in Michigan, Wisconsin and New York—under harsh conditions—demonstrate the superb performance of polymer-coated pipe.

Aluminum Durability

Superior abrasion resistance

CORLIX® aluminum pipe's superior abrasion resistance has been proven through years of exposure to wet/dry abrasion-corrosion cycles. In normally abrasive runoffs, aluminum will only peen with minimum metal loss.

Superior corrosion resistance

CORLIX's superior corrosion resistance is achieved by a special aluminum clad culvert material. The rugged core alloy 3004- (H32 or H34) is rated as highly corrosion resistant. Then to increase its resistance, the aluminum culvert coil is clad on both sides with alloy 7072, which is anodic to the core alloy—protecting it both physically and electrochemically against corrosion. This is primarily due to a thin, tenacious, inert oxide barrier that forms on the metal surface when exposed to air. This tough, tightly adhering oxide barrier cannot be easily removed. If damaged or affected by an aggressive environment, it reforms.

This is referred to as a "self-healing" effect. The oxide barrier appears on the pipe surface as a grayish-white coating that will build up over time.

Service-life expectancy studies on installed aluminum drainage products have been conducted since the early 1960s by state and federal agencies. 16 gage (0.060") corrugated aluminum pipe provides a predictable service life of 75+ years in the recommended soil/water environments with a pH range of 4.0 to 9.0 and a resistivity of 500 ohm-cm or greater.

In addition, good performance can be expected in seawater environments of 35 ohm-cm when the pipe is backfilled with a clean, free draining granular material.

With proper backfilling and cover, CORLIX is an excellent choice for drainage pipe.

For multiple barrel applications, Contech manufactures multi-outlet end sections.

End Sections

Contech End Sections provide an economical, attractive, hydraulically efficient and durable inlet and outlet on culverts and storm sewers. End sections provide protection against erosion and scouring. They improve hydraulic capacity by channeling flow into and out of the pipe efficiently. They are also reusable if lengthening or relocating the drainage structure is necessary.

Galvanized End Sections present a clean-cut effect that is aesthetically pleasing. The tapered sides blend with the contour of the slope to increase roadside aesthetics. Compared with concrete headwalls, end sections are safer and easier to maintain. Weeds are cut easily with regular highway mowers. The wide opening minimizes collection of debris and silting.

End sections provide protection against erosion and scouring.

Joints and Fittings

Contech HEL-COR pipe and pipe-arch is available with annular re-rolled ends or non-rerolled ends providing a variety of joint configurations. For 3"x1" and 5"x1" HEL-COR pipe-arch, non-rerolled ends with flat or dimpled bands and flat gaskets are recommended.

HUGGER® Joint

Contech offers the HUGGER Joint, which uses an annular corrugation to fully engage each annular pipe end for 360°. When used with optional rubber O-ring gaskets, the HUGGER Joint is the industry's tightest.

QUICK STAB® Joint

Saves Time and Money With Faster Pipe Coupling

The Contech QUICK STAB joint speeds installation, reducing your costs— installing storm sewers and culverts has never been easier or faster.

The QUICK STAB joint is a bell and spigot joining system with the bell only 1-1/2" larger than the pipe. It is attached to the pipe at the factory, then shipped to the job site ready for installation.

Other Joints

Contech offers are variety of other joint systems to meet your project needs including corrugated bands, flat bands, dimple bands; all available with a variety of gasket options.

Bell and spigot joints speed installation and provide the same soil tightness as HUGGER bands.

Contech HUGGER® Joint is the industry's tightest

Contech QUICK STAB save time and money over conventional banding systems.

Fittings

Standard fittings such as tees, wyes, elbows, saddle branches, manifolds and reducers are available for Contech Pipe and Pipe-Arches. Special fittings, including manholes and catch basins, can be fabricated to meet your needs.

Contech is a leader in Underground Detention Systems. Pre-fabricated fittings can be designed and constructed to efficiently meet project requirements.

Relining & Rehabilitation

As our infrastructure ages, the roadway, water management and sewer control systems are deteriorating and losing integrity. Maintaining these critical structures is a major challenge.

However, it is often possible to salvage failing structures and eliminate the time, cost and safety problems of complete replacement.

Restoring structural and/or hydraulic capacity without road closure is usually achieved with less time, expense and disruption than the replacement alternative. Contech offers a variety of products and systems to facilitate rehabilitation of storm and sanitary sewers, culverts and bridges.

Corrugated Steel Pipe was used to repair a failing reinforced concrete box under a height of cover of 91 feet. Grout plugs were furnished to facilitate concrete grout placement between the new corrugated steel pipe and the existing concrete box.

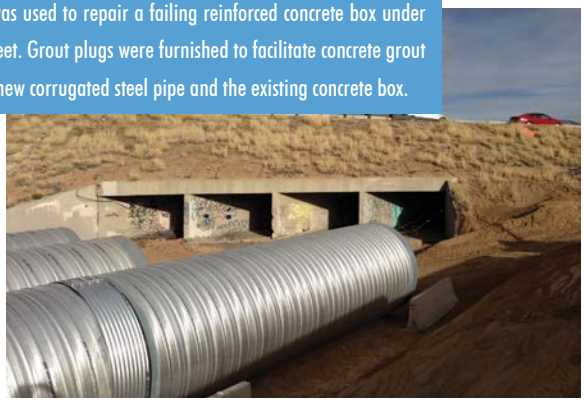

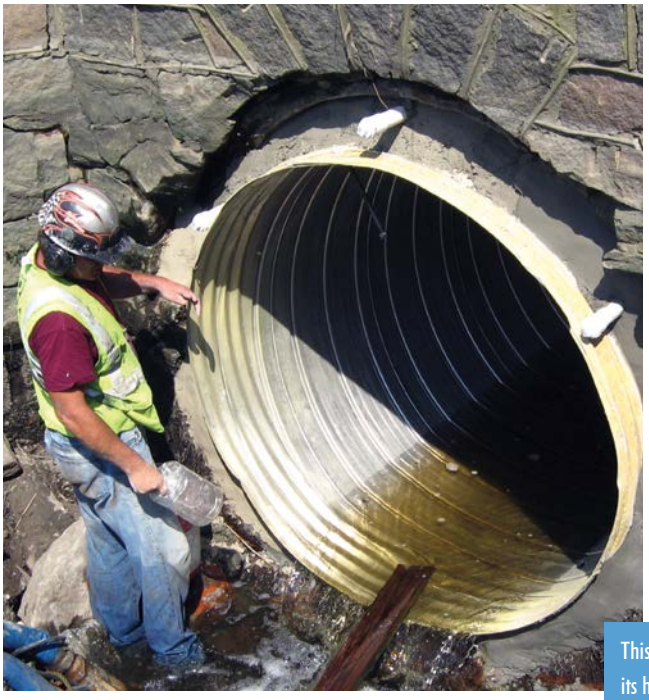

This aging drainage structure was relined with steel ULTRA FLO pipe, restoring its hydraulic and structural properties while avoiding costly and time-consuming replacement.

Contech offers a variety of products and systems to facilitate rehabilitation.

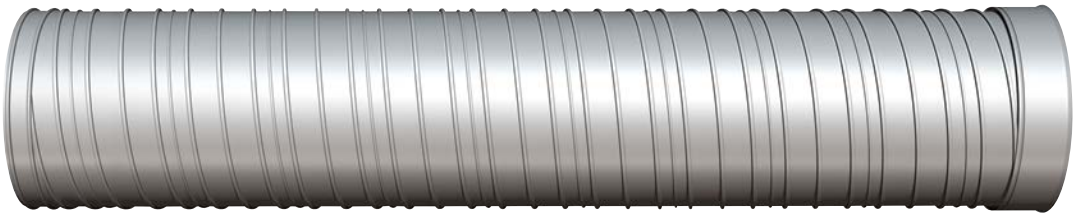

MOBILE PIPE®

MOBILE PIPE® modular mill can be delivered to remote site locations on trucks and assembled on-site for fast and cost-effective on-site steel pipe manufacturing. The MOBILE PIPE modular mill is designed to be a self-supporting factory that can be quickly deployed and put into production. Re-corrugated ends are also available to meet specific project needs. Once on-site, pipe manufacturing progresses quickly enough to allow pipe installation within four hours.

MOBILE PIPE can produce HEL-COR®, ULTRA FLO® and Smooth Cor™ corrugated metal pipe in a variety of sizes. Diameters from 3 to 16 feet and lengths up to 35 feet can be accommodated. This pipe meets the same levels of quality construction as does all Contech manufactured pipe, with high coil feedrate speeds and the same lock-seam edge process used in conventional pipe manufacturing. The intermodal capapbilities allow these systems to moved via truck, train or ship.

MOBILE PIPE® is ideal for:

- Remote Jobs
- Projects requiring large continuous pipe production (detention systems, windmill foundation forms, vertical shafts, caissons)
- Support for natural disasters where immediate deployment and rebuilding is required
- Sites with limited storage space or restricted traffic patterns (mines, military bases, airports, etc.)

Air Power/Windmill — Contech large-diameter CMP – manufactured with the MOBILE PIPE® – is used as a deep foundation form at the base of the windmill. CMP is placed vertically to act as a form for the poured-in-place concrete foundation along with being used in the many access roads.

CONTECH®
ENGINEERED SOLUTIONS
A QUIKRETE® COMPANY

MANUFACTURING AMERICA'S INFRASTRUCTURE™

We manufacture engineered solutions for complex civil infrastructure challenges and create lasting value for project stakeholders through unrivaled expertise, support and workmanship.

To us, it's about being a trusted partner for project owners, engineers and customers while doing meaningful work that helps build our communities.

PIPE SOLUTIONS

STORMWATER SOLUTIONS

STRUCTURE SOLUTIONS

For more information, we have representatives for all 50 states.
Please call 800-338-1122 or visit www.conteches.com.

NOTHING IN THIS CATALOG SHOULD BE CONSTRUED AS A WARRANTY. APPLICATIONS SUGGESTED HEREIN ARE DESCRIBED ONLY TO HELP READERS MAKE THEIR OWN EVALUATIONS AND DECISIONS, AND ARE NEITHER GUARANTEES NOR WARRANTIES OF SUITABILITY FOR ANY APPLICATION. CONTECH MAKES NO WARRANTY WHATSOEVER, EXPRESS OR IMPLIED, RELATED TO THE APPLICATIONS, MATERIALS, COATINGS, OR PRODUCTS DISCUSSED HEREIN. ALL IMPLIED WARRANTIES OF MERCHANTABILITY AND ALL IMPLIED WARRANTIES OF FITNESS FOR ANY PARTICULAR PURPOSE ARE DISCLAIMED BY CONTECH. SEE CONTECH'S CONDITIONS OF SALE (AVAILABLE AT WWW.CONTECHES.COM/COS) FOR MORE INFORMATION.

© 2026 Contech Engineered Solutions LLC , a QUIKRETE Company
All rights reserved. Printed in USA.

CMP Bro 02/26 MC DIGITAL