GENERAL NOTES:

- THE INFORMATION PROVIDED IN THIS GUIDE IS FOR REFERENCE ONLY AND PROVIDES PROVEN PROCEDURES FOR FIELD ASSEMBLY AND INSTALLATION OF CONTECH BRIDGES THAT WILL NOT RESULT IN DAMAGE TO THE STRUCTURE. CONTECH IS NOT RESPONSIBLE FOR THE MEANS, METHODS AND EQUIPMENT USED FOR FIELD ASSEMBLY AND INSTALLATION OF THE BRIDGE STRUCTURES. CONTECH WILL NOT BE HELD LIABLE FOR ANY ISSUES THAT ARISE DUE TO FIELD ASSEMBLY AND INSTALLATION OF THE BRIDGE STRUCTURES.
- THIS GUIDE IS A GENERIC DOCUMENT FOR THE INSTALLATION OF OUR TYPICAL BRIDGES. THE CONTECH PROJECT SPECIFIC PLANS SHOULD BE REFERENCED FOR PROJECT SPECIFIC DETAILS AND FOR ADDITIONAL INFORMATION.
- CONTECH IS NOT RESPONSIBLE FOR PROJECT SPECIFIC ERECTION PLANS.
- CONTINUED INSPECTIONS AND MAINTENANCE OF THE BRIDGE STRUCTURE SHOULD BE DONE PER CONTECH'S MAINTENANCE GUIDELINES AND IS NOT THE RESPONSIBILITY OF CONTECH.
- ON PAINTED, GALVANIZED OR METALIZED BRIDGES, CONTRACTOR IS RESPONSIBLE FOR ALL FINAL FINISH TOUCH UP OR REPAIRS. THIS INCLUDES BUT IS NOT LIMITED TO ALL BOLTS, NUTS, WASHERS AND ANY FINISH DAMAGE DUE TO SHIPPING, HANDLING, ASSEMBLY AND INSTALLATION. WHEN INSTALLING BRIDGES CARE MUST BE TAKEN TO MINIMIZE DAMAGE TO THE FINISH DURING INSTALLATION. PADDING SHOULD BE USED TO PROTECT THE FINISH FROM CHAINS, CHOKERS OR SLINGS. FOR PAINTED BRIDGES A NOMINAL AMOUNT OF TOUCH UP PAINT WILL BE SUPPLIED. THIS IS OFTEN AN EPOXY SYSTEM AND ATTENTION WILL NEED TO BE GIVEN TO MIXING THE PAINT. TOUCH UP MUST BE APPLIED TO BLEND WITH FACTORY APPLICATION AS MUCH AS POSSIBLE.
- FOR ADDITIONAL INFORMATION PLEASE CONTACT CONTECH AT:
  PHONE: 1-800-328-2047
  WEBSITE: HTTPS://WWW.CONTECHES.COM/
  PLEASE INCLUDE THE CONTECH PROJECT NUMBER IN ANY CORRESPONDENCE.

UNLOADING INSTRUCTIONS

- BRIDGE SECTIONS WILL ARRIVE ON OVER THE ROAD TRUCKING AND BE DELIVERED AS CLOSE TO THE BRIDGE LOCATION AS POSSIBLE. THE CONTRACTOR WILL BE RESPONSIBLE FOR UNLOADING THE BRIDGE. OCCASIONALLY, IT MAY BE NECESSARY TO UNLOAD OTHER CONTECH MATERIAL TO REACH THE BRIDGE. THE CONTRACTOR WILL NEED TO RELOAD SAID MATERIAL IN THIS EVENT.
- LOOSE ITEMS SUCH AS SETTING PLATES AND BOLTS WILL ARRIVE WITH THE BRIDGE. THE CONTRACTOR SHOULD MAKE SURE ALL LOOSE ITEMS ARE UNLOADED WITH THE BRIDGE. REFER TO THE BILL OF LADING.

BEARING PREPARATION INSTRUCTIONS

- ALL LOOSE SETTING PLATES ARE TO BE SET ON THE FOUNDATIONS ON APPROXIMATELY ¾" OF SHIMS (WHEN GROUT IS SPECIFIED) BEFORE SETTING THE BRIDGE. LIGHTLY APPLY GREASE TO TOPS OF ALL SETTING PLATES EXCEPT TEFLON/STAINLESS STEEL BEARINGS.
- ALL TEFLON/STAINLESS BEARING ASSEMBLIES WILL BE FACTORY SUPPLIED. MAKE CERTAIN THAT THE SETTING PLATE (LOWER PLATE THAT SITS ON THE FOUNDATION) HAS THE TEFLON FACING UP WITH THE STAINLESS BEARING PLACED ON TOP OF THE TEFLON. REMOVE ANY PROTECTIVE COATINGS FROM THE TEFLON AND STAINLESS SURFACES.
- SHIMS AND GROUT ARE NOT PROVIDED BY CONTECH.
- REFER TO THE CONTECH PROJECT SPECIFIC PLANS FOR ANY SPECIAL INSTRUCTIONS RELATED TO BEARINGS.

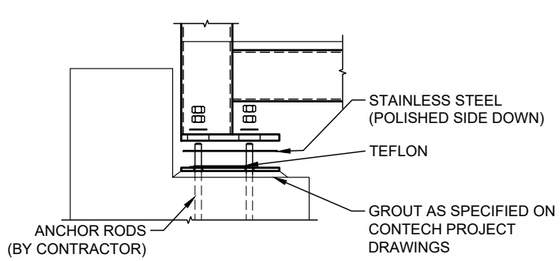

HEAVY HEX BOLT DIAMETERS AND WRENCH SIZE	
BOLT DIAMETER (IN)	WRENCH OR SOCKET SIZE (IN)
½	7/8
⅝	1 1/16
¾	1¼
⅞	1 7/16
1	1⅝
1¼	2

ASSEMBLY INSTRUCTIONS (WHEN REQUIRED)

- TYPICALLY BRIDGES ARE SHIPPED WITH ALL FLOOR BEAMS, LATERAL BRACING AND DECKING SHOP WELDED IN PLACE OR SHOP ASSEMBLED. DEPENDING ON BRIDGE OR SITE REQUIREMENTS, SOME OR ALL OF THESE ITEMS MAY BE SHIPPED LOOSE. DURING THE SHOP FABRICATION PROCESS BRIDGE PARTS ARE TYPICALLY SHOP FIT TO ASSURE THAT ALL PIECES AND SECTIONS WILL FIT TOGETHER IN THE FIELD. IF DURING THE ASSEMBLY PROCESS ANY MISALIGNMENT APPEARS TO OCCUR, STOP, REMOVE OR LOOSEN ALL BOLTS, SHIFT PIECES OR SECTIONS AROUND UNTIL PROPER ALIGNMENT OCCURS AND PROCEED WITH ASSEMBLY.
- BOLT ANY LOOSE FLOOR BEAMS AND LATERAL BRACING TO THE TRUSS SECTIONS. ALL BOLTS SHOULD BE INSTALLED FINGER TIGHT AND LEFT LOOSE UNTIL ALL BOLTS, INCLUDING THE SPLICE BOLTS ARE IN PLACE. REFERENCE CONTECH PROJECT SPECIFIC PLANS FOR BOLTING DETAILS.
- SPLICE TRUSSES PER INSTRUCTIONS BELOW IF REQUIRED.
- INSTALL ANY LOOSE STRINGERS, LEAVE BOLTS FINGER TIGHT. REFERENCE CONTECH PROJECT SPECIFIC PLANS FOR BOLTING DETAILS.
- AFTER THE BRIDGE STRUCTURE IS FULLY ASSEMBLED, ALL BOLTS SHOULD BE BROUGHT TO SNUG TIGHT CONDITION TO INSURE THAT PLATES AND THE MEMBERS ARE BROUGHT INTO GOOD CONTACT WITH EACH OTHER AND THEN TENSIONED USING THE TURN-OF-THE NUT METHOD PER THE CURRENT *SPECIFICATION FOR STRUCTURAL JOINTS USING HIGH STRENGTH BOLTS*. (DOCUMENT CAN BE FOUND AT WWW.BOLTCOUNCIL.ORG)
- INSTALL ANY LOOSE DECKING MATERIALS. REFERENCE CONTECH PROJECT SPECIFIC PLANS FOR DECKING MATERIALS INSTALLATION.
- REFERENCE CONTECH PROJECT SPECIFIC PLANS FOR ADDITION DETAILS.
- THESE PROCEDURES ARE RECOMMENDATIONS ONLY. THE CONTRACTOR WILL DETERMINE HOW THE BRIDGES SHALL BE ASSEMBLED BASED ON EXPERIENCE AND JOB SITE CONDITIONS. THESE PROCEDURES CAN BE USED FOR SIMPLE SPANS AS WELL AS MULTIPLE SPAN STRUCTURES. LIFTING WEIGHTS ARE LOCATED ON THE SHOP DRAWINGS.

SPLICING INSTRUCTIONS (WHEN REQUIRED)

- DURING THE SHOP FABRICATION PROCESS BRIDGE SPLICES ARE TYPICALLY SHOP FIT TO ASSURE THAT SECTIONS WILL FIT TOGETHER IN THE FIELD. IF DURING THE SPLICE ASSEMBLY PROCESS ANY MISALIGNMENT APPEARS TO OCCUR, STOP, REMOVE OR LOOSEN ALL SPLICE BOLTS, SHIFT SECTIONS AROUND UNTIL PROPER ALIGNMENT OCCURS AND PROCEED WITH ASSEMBLY.
- TWO TYPES OF BOLTED SPLICE CONNECTIONS ARE TYPICALLY USED UNLESS OTHERWISE NOTED ON THE CONTECH PROJECT SPECIFIC PLANS. FOR SPLICE DETAILS REFER TO THE CONTECH PROJECT SPECIFIC PLANS.
  - CHORD SPLICE WILL TYPICALLY HAVE LOOSE SPLICE PLATES WITH NUT CAPTURE CHANNELS LOCATED ON THE INSIDE OF THE CHORD MEMBER. EACH HOLE LOCATION WILL RECEIVE ONE LOOSE BOLT. CHORD SPLICE PLATES WILL ARRIVE LOOSE OR ATTACHED BY WIRE AND SHIPPING BOLTS. LIKE PLATES ARE INTERCHANGEABLE BUT IF THEY ARRIVE ATTACHED, WE RECOMMEND USING THEM IN THE LOCATION WHERE THEY ARE ATTACHED. THE BRIDGE WAS FABRICATED WITH THE PLATES IN THESE LOCATIONS AND USING THEM IN THESE LOCATIONS WILL INSURE THE BEST FIT. SHIPPING BOLTS ARE TO BE REMOVED AND DISCARDED. PLATES ARE THEN TO BE SET IN THE PROPER LOCATION ON THE SPLICE AND BOLTS INSTALLED LOOSE. FOR PLATE LOCATIONS AND BOLT SIZE REFER TO THE CONTECH PROJECT SPECIFIC PLANS.
  - VERTICAL TRUSS DIAGONALS, HORIZONTAL BRACE DIAGONALS, AND SMALL TRUSS CHORDS WILL BE JOINED WITH SPLICE PLATES ON THE *OUTSIDE* OF THE TRUSS MEMBERS WITH PASS THROUGH BOLTS. EACH HOLE LOCATION WILL RECEIVE ONE LOOSE BOLT AND ONE LOOSE NUT. SPLICE PLATES WILL ARRIVE LOOSE OR WIRED AND BOLTED TO THE BRIDGE. LIKE PLATES ARE INTERCHANGEABLE. FOR PLATE LOCATIONS AND BOLT SIZE REFER TO THE CONTECH PROJECT SPECIFIC PLANS.
- THERE ARE TWO COMMON PROCEDURES FOR FITTING BRIDGE SECTIONS TOGETHER:
  - MOST SPLICED BRIDGES ARRIVE IN TWO SECTIONS. PLACE ONE SECTION ON A RELATIVELY FLAT SURFACE WITH THE SPLICED END CRIBBED UP IN THE AIR APPROXIMATELY 2'. THIS WILL ALLOW FOR EASIER FIT UP AND ALLOWS ROOM TO WORK UNDER THE BRIDGE. THE OTHER SECTION IS LIFTED WITH A CRANE. WHEN THE CHORD SPLICES ARE LINED UP, THE SECTION WILL BE SLID INTO PLACE.
  - MID-AIR SPLICING CAN BE USED WHEN THERE ARE SEPARATE CRANES TO LIFT EACH SECTION OR ONE SECTION MAY BE PLACED ON THE APPROPRIATE FOUNDATION WHILE THE SPLICE RESTS ON TEMPORARY SHORING. THE OTHER SECTION IS LIFTED WITH A CRANE. WHEN THE CHORD SPLICES ARE LINED UP, THE SECTION WILL BE SLID INTO PLACE.

  FOR BOTH PROCEDURES IT MAY BE NECESSARY TO USE COME-A-LONGS TO PULL THE SECTIONS TOGETHER.
- AFTER SECTIONS ARE FIT TOGETHER, ALL SPLICE PLATES, BOLTS AND NUTS SHALL BE INSTALLED FINGER TIGHT, DO NOT TIGHTEN ANY BOLTS UNTIL ALL BOLTS ARE INSTALLED. WASHERS ARE TYPICALLY PROVIDED, REFERENCE CONTECH PROJECT SPECIFIC PLANS FOR ADDITIONAL INFORMATION. AFTER ALL BOLTS ARE IN PLACE, THEY SHOULD BE BROUGHT TO SNUG TIGHT CONDITION TO INSURE THAT PLATES AND THE MEMBERS ARE BROUGHT INTO GOOD CONTACT WITH EACH OTHER AND THEN TENSIONED IN ACCORDANCE WITH ASSEMBLY INSTRUCTIONS ABOVE..
- DECKING CONSIDERATIONS:
  - IF THE BRIDGE HAS WOOD DECKING, IT IS ALLOWABLE BUT NOT REQUIRED FOR THE CONTRACTOR TO REMOVE 2-3 DECK PLANKS FROM EACH SIDE OF THE SPLICE TO MAKE ROOM FOR BOLTING THE BRACE DIAGONAL AND STRINGERS BELOW THE DECK.
  - IF THE BRIDGE HAS A CONCRETE DECK, MOST OF THE GALVANIZED FORM DECKING WILL BE SHIPPED FACTORY INSTALLED EXCEPT FOR THE PIECES REQUIRED TO COVER THE SPLICE. THE CONTRACTOR WILL BE REQUIRED TO INSTALL THE SPLICE PIECES. THESE PIECES WILL BE CONNECTED TO THE FLOOR BEAMS UTILIZING CONNECTION METHODS DESCRIBED IN CONTECH PROJECT SPECIFIC PLANS. CONNECTIONS ARE TO BE PROVIDED BY CONTRACTOR.
- IF DECKING IS SHIPPED LOOSE, ALL DECKING MUST BE INSTALLED PER THE CONTECH PROJECT SPECIFIC PLANS BY THE CONTRACTOR.
- THESE PROCEDURES ARE RECOMMENDATIONS ONLY. THE CONTRACTOR WILL DETERMINE THE BEST PROCEDURES TO USE BASED ON EXPERIENCE AND JOB SITE CONDITIONS. THESE PROCEDURES CAN BE USED FOR SIMPLE SPANS AS WELL AS MULTIPLE SPAN STRUCTURES. LIFTING WEIGHTS ARE LOCATED ON THE SHOP DRAWINGS.
- REFER TO CONTECH PROJECT SPECIFIC PLANS FOR ANY SPECIAL INSTRUCTIONS RELATED TO BOLTED SPLICES.

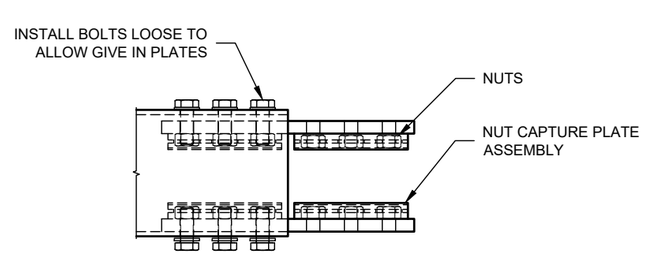

CHORD SPLICE PRIOR TO SPLICING

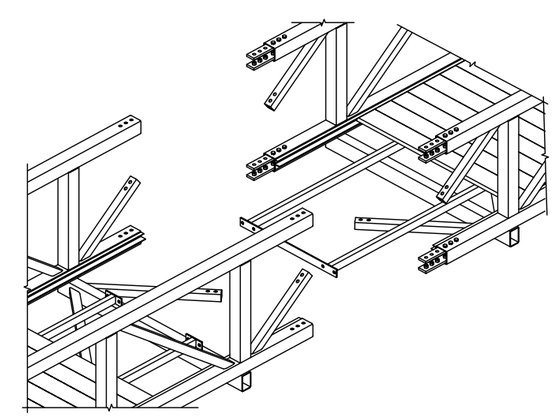

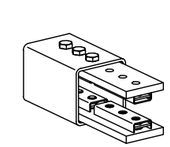

CHORD SPLICE ISOMETRIC
FOR REFERENCE ONLY, NTS

The design and information shown on this drawing is provided as a service to the project owner, engineer and contractor by Contech Engineered Solutions LLC ("Contech"). Neither this drawing, nor any part thereof, may be used, reused, disclosed, distributed or reproduced without the prior written consent of Contech. Failure to comply is done at the user's own risk and Contech expressly disclaims any liability or responsibility for such use.

If discrepancies between the supplied information upon which the drawing is based and actual field conditions are encountered as site work progresses, these discrepancies must be reported to Contech immediately after discovery to allow for review of the original design. Contech disclaims any responsibility for work done from incomplete or inaccurate information supplied by others.

MARK	DATE	REVISION DESCRIPTION	BY

BRIDGE INSTALLATION GUIDE
PEDESTRIAN TRUSS

CONTECH ENGINEERED SOLUTIONS LLC
www.ContechES.com
8301 State Highway 29 North, Alexandria, MN 56308
800-328-2047 320-763-7179 320-763-5148 FAX
CONTINENTAL BRIDGE

DATE: 1/27/2021
DESIGNED: DRAWN:
CHECKED: APPROVED:
PROJECT No.: SEQUENCE No.:
SHEET: 1 OF 2

AISC CERTIFIED FABRICATOR

X:\CONTINENTALBRIDGE\DEPARTMENT\ENGINEERING\BIG R INSTALLATION GUIDES\REVISED TO CONTECH\INSTALLATION INSTRUCTIONS PEDESTRIAN.DWG 2/9/2021 11:29 AM

LIFTING INSTRUCTIONS

- USE A MINIMUM OF (4) LIFTING POINTS WHEN LIFTING ANY BRIDGE OR BRIDGE SECTION. IT IS RECOMMENDED THAT LIFTING POINTS BE NO MORE THAN 1/3 OF THE BRIDGE SPAN IN FROM THE ENDS OF THE BRIDGE.
- HALF THROUGH TRUSS (NO TOP BRACING) BRIDGES MAY BE LIFTED FROM THE TOP CHORD IF A SPREADER BAR IS USED TO KEEP ANY TANGENTIAL FORCES FROM BEING APPLIED TO THE BRIDGE. THE TOP CHORDS SHOULD NEVER BE PULLED TOWARDS EACH OTHER DURING THE LIFTING PROCESS. BRIDGES MAY ALSO BE LIFTED FROM THE BOTTOM CHORD OR FLOOR BEAMS WITHOUT SPREADER BARS BUT CARE MUST BE TAKEN TO AVOID DAMAGE TO THE SAFETY RAIL SYSTEM OR DECK.
- FULL THROUGH TRUSS (BOX TRUSS WITH OVERHEAD TOP BRACING) BRIDGES MAY BE LIFTED FROM THE TOP CHORD WITHOUT A SPREADER BAR.
- ALL LIFTING POINTS MUST BE AT A VERTICAL OR FLOOR BEAM POINT.

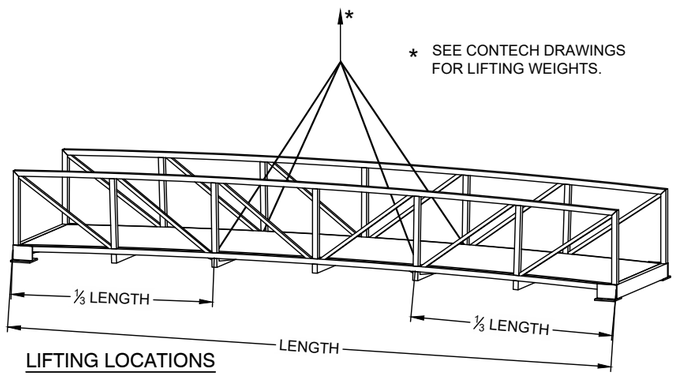

LIFTING LOCATIONS

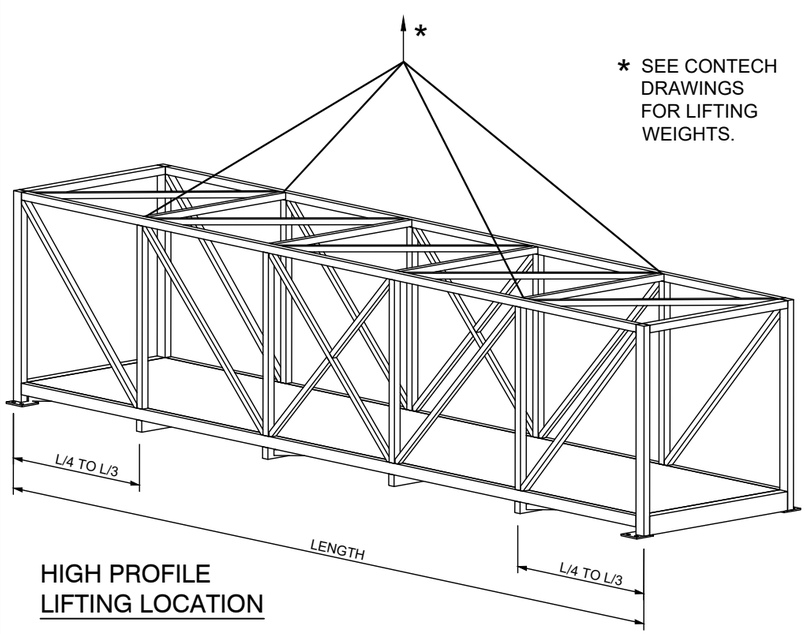

HIGH PROFILE
LIFTING LOCATION

RIGGING INSTRUCTIONS

- RIGGING TO BE DONE BY WRAPPING SLINGS, CHOKERS, OR CHAINS AROUND TRUSS MEMBERS AS SHOWN BELOW.
- DETERMINATION OF ADEQUATELY SIZED RIGGING IS UP TO THE CONTRACTOR, REFER TO THE CONTECH PROJECT SPECIFIC PLANS FOR LIFTING WEIGHTS.
- RIGGING AT THE TOP CHORD IS TO BE DONE BY WRAPPING SLING, CHOKER OR CHAIN AROUND THE OUTSIDE OF THE VERTICAL AND OR DIAGONAL AND UP AND INSIDE THE TOP CHORD.

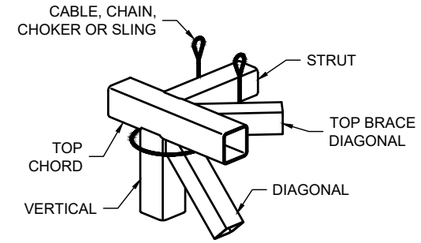

RECOMMENDED FOR
HIGH PROFILE

- RIGGING AT THE BOTTOM CHORD ON UNDERHUNG FLOOR BEAMS WITH GAP BETWEEN DECK AND CHORD FACE, WRAP SLING, CHOKER OR CHAIN OVER TOP OF FLOOR BEAM, UNDER BOTTOM CHORD, UP AND INSIDE OF TRUSS OVER THE DECK. CARE MUST BE TAKEN TO AVOID DAMAGE TO SAFETY RAIL SYSTEM OR DECK.
- RIGGING AT THE FLOOR BEAM ON H-SECTION FLOOR BEAMS, WRAP SLING, CHOKER OR CHAIN INSIDE THE VERTICAL BELOW THE FLOOR BEAM, AROUND THE VERTICAL CROSSING OVER ON THE OUTSIDE OF THE VERTICAL, UP AND INSIDE THE TRUSS OVER THE DECK. CARE MUST BE TAKEN TO AVOID DAMAGE TO SAFETY RAIL SYSTEM OR DECK.

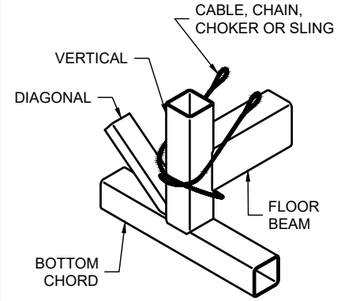

RECOMMENDED FOR
CONNECTOR - H

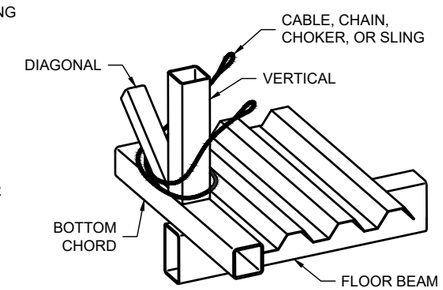

LOW PROFILE WITH
CONCRETE OR GRATE DECK

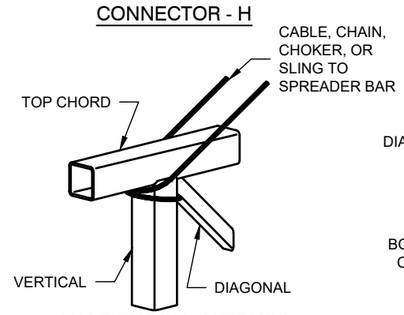

HALF THROUGH TRUSS
LIFTED FROM TOP CHORD

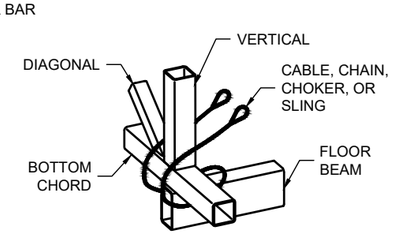

RECOMMENDED FOR
UNDERHUNG

- WHEN AN UNDERHUNG FLOOR BEAM BRIDGE HAS A CONCRETE DECK THAT EXTENDS ALL THE WAY TO THE CHORD FACE, LIFTING MAY BE DONE BY WRAPPING SLING, CHOKER OR CHAIN AROUND A DIAGONAL AND VERTICAL MEMBER WHERE THEY MEET ON THE TOP OF THE BOTTOM CHORD AT DECK LEVEL. THIS CONFIGURATION SHOULD ONLY BE USED ON HALF THROUGH TRUSS BRIDGES LESS THAN 100 FT LONG BEFORE DECK IS PLACED. CARE MUST BE TAKEN TO AVOID DAMAGE TO SAFETY RAIL SYSTEM OR DECK.

SETTING INSTRUCTIONS

- BRIDGE SHALL BE SET ON FOUNDATIONS AND ADJUSTED SO THAT SPACING IS EQUAL AT BOTH ENDS OR AS DIRECTED IN THE CONTECH PROJECT SPECIFIC PLANS. THE EXPANSION END GAP DESIGNATED IN THE CONTECH PROJECT SPECIFIC PLANS MUST MAINTAINED FOR PROPER EXPANSION. IF THE BRIDGE HAS AN ELEVATION DIFFERENCE, BE SURE TO SET THE HIGH END OF THE BRIDGE ON THE HIGHER FOUNDATION PER THE CONTECH PROJECT SPECIFIC PLANS. BRIDGES WITH AN ELEVATION DIFFERENCE WILL HAVE A WELDED MARK - (H) FOR HIGH, (L) FOR LOW - LOCATED ON THE OUTSIDE FACE OF THE CORRESPONDING END FLOOR BEAM. REFER TO THE CONTECH PROJECT SPECIFIC PLANS FOR CORRECT ALIGNMENT.
- AFTER THE BRIDGE IS SET, SHIMS CAN BE ADJUSTED TO MAKE THE DECK FLUSH WITH THE BACK WALL AND TO OBTAIN FULL CONTACT BETWEEN THE SETTING PLATE AND THE BEARING PLATE. SHIMS NOT PROVIDED BY CONTECH.
- AFTER ALL ADJUSTMENTS ARE MADE, PLACE HIGH STRENGTH NON-SHRINK GROUT UNDER SETTING PLATE TO CREATE FULL CONTACT BETWEEN THE SETTING PLATE AND THE FOUNDATION SEAT. NON-SHRINK GROUT NOT PROVIDED BY CONTECH.
- EACH ANCHOR BOLT WILL RECEIVE (1) WASHER AND (2) NUTS. ONE END OF THE BRIDGE IS DESIGNED TO BE *FIXED* AND THE NUTS ARE TO BE INSTALLED TIGHT. THE *EXPANSION END* WILL HAVE THE FIRST NUT TIGHTENED FINGER TIGHT TO THE WASHER PLACED ON THE BEARING PLATE. THE SECOND NUT WILL BE INSTALLED TIGHT TO THE FIRST. REFER TO THE CONTECH PROJECT SPECIFIC PLANS TO DETERMINE WHICH END OF THE BRIDGE IS TO BE THE FIXED OR EXPANSION END.
- REFER TO THE CONTECH PROJECT SPECIFIC PLANS FOR ANY SPECIAL INSTRUCTIONS RELATED TO SETTING THE BRIDGE.

CONCRETE DECK INSTALLATION INSTRUCTIONS (WHEN REQUIRED)

- ANY LOOSE STAY IN PLACE FORM DECKING SHALL BE INSTALLED. THESE PIECES WILL BE CONNECTED TO THE FLOOR BEAMS UTILIZING SELF-TAPPING SCREWS. IT IS RECOMMENDED THAT THE CONTRACTOR PRE-DRILL ALL HOLES PRIOR TO INSTALLING THE SCREWS.
- STAY IN PLACE FORM DECK SHALL BE CLEANED OF DEBRIS AND ANY FOREIGN MATTER.
- IF NECESSARY ANY GAPS IN DECKING MAY BE FILLED WITH DUCT TAPE OR SPRAY FOAM TO PREVENT ANY CONCRETE LEAKAGE.
- REINFORCING STEEL SHALL BE PLACED PER THE DETAILS ON THE CONTECH PROJECT SPECIFIC PLANS. THE MATERIAL, SIZE, ORIENTATION AND LOCATION OF THE REINFORCING STEEL SHALL CONFORM TO THE CONTECH PROJECT SPECIFIC PLANS.
- CONCRETE SHALL BE PLACED IN ONE CONTINUOUS PLACEMENT FROM ONE END OF THE DECK TO THE OTHER. IF THE CONCRETE CANNOT BE PLACED IN ONE PLACEMENT, CONTECH RECOMMENDS PLACING FROM THE CENTER OUT AND PLACING CONSTRUCTION JOINTS OVER THE CENTERLINE OF THE FLOOR BEAMS. CONCRETE MIX DESIGN, MATERIALS, MIXING, PLACEMENT, FINISHING AND TESTING SHALL BE IN ACCORDANCE WITH THE CONTECH PROJECT SPECIFIC PLANS.
- REFER TO THE CONTECH PROJECT SPECIFIC PLANS FOR MORE INFORMATION OR ANY SPECIAL INSTRUCTIONS RELATED TO INSTALLING THE CONCRETE DECK.

CONTECH
FABRICATION
DRAWING

The design and information shown on this drawing is provided as a service to the contractor, owner, engineer and contractor by Contech Engineered Solutions LLC ("Contech"). Neither this drawing, nor any part thereof, may be used, reproduced or modified in any manner without the prior written consent of Contech. Failure to comply is done at the user's own risk and Contech expressly disclaims any liability or responsibility for such use.

If discrepancies between the supplied information upon which the drawing is based and actual field conditions are encountered as site work progresses, these discrepancies must be reported to Contech immediately for design review. Contech disclaims any responsibility for work based on incomplete or inaccurate information supplied by others.

MARK	DATE	REVISION DESCRIPTION	BY

BRIDGE INSTALLATION GUIDE
PEDESTRIAN TRUSS

CONTECH ENGINEERED SOLUTIONS LLC
www.ContechES.com
8301 State Highway 29 North, Alexandria, MN 56308
800-338-2047 320-763-5146 FAX
CONTINENTAL BRIDGE

DATE: 1/27/2021
DESIGNED: DRAWN:
CHECKED: APPROVED:
PROJECT No.: SEQUENCE No.:
SHEET: 2 OF 2

X:\CONTINENTALBRIDGE\DEPARTMENT\ENGINEERING\BIG R INSTALLATION GUIDES\REVISED TO CONTECH\INSTALLATION INSTRUCTIONS PEDESTRIAN.DWG 2/9/2021 11:29 AM