SITE SPECIFIC DATA*

PROJECT NUMBER	–		
PROJECT NAME	–		
PROJECT LOCATION	–		
STRUCTURE ID	–		
WATER QUALITY FLOW RATE (CFS)			
FULL CAPTURE TRASH FLOW RATE (CFS)			
PEAK FLOW RATE (CFS)			
PEAK STORM DURATION (YEARS)			
PIPE DATA	I.E.	MATERIAL	DIAMETER
INFLOW PIPE 1	–	TBD	24
OUTFLOW PIPE 1	–	TBD	24
RIM ELEVATION	–		
SURFACE LOADING REQUIREMENT			HS20
FRAME AND COVER		(2) 36"ø	
CORROSIVE SOIL CONDITIONS			NA
KNOWN GROUNDWATER ELEVATION			NA

NOTES: CONCEPT ONLY, NOT FOR CONSTRUCTION.

*PER ENGINEER OF RECORD

DSBB PERFORMANCE DATA

TREATMENT FLOW RATE (CFS)	0.00
FULL CAPTURE TRASH FLOW RATE (CFS)	0.00
SETTLING AREA (SF)	50.00
LOADING RATE (GPM/SF)	0.00
SCREEN SYSTEM STORAGE CAPACITY (CF)	34.00
SEDIMENT STORAGE CAPACITY (CF)	140.00
80% TSS REMOVAL @ --- MICRON	

DSBB STORAGE CAPACITIES

CAGE SCREEN CAPACITY				
	LENGTH (FT)	WIDTH (FT)	HEIGHT (FT)	TOTAL (CF)
SCREEN 1	5.38	1.58	2.00	17.00
SCREEN 2	5.38	1.58	2.00	17.00
SEDIMENT CHAMBER CAPACITY				
CHAMBER 1	3.13	5.00	3.00	46.88
CHAMBER 2	3.04	5.00	3.00	45.63
CHAMBER 3	3.17	5.00	3.00	47.50

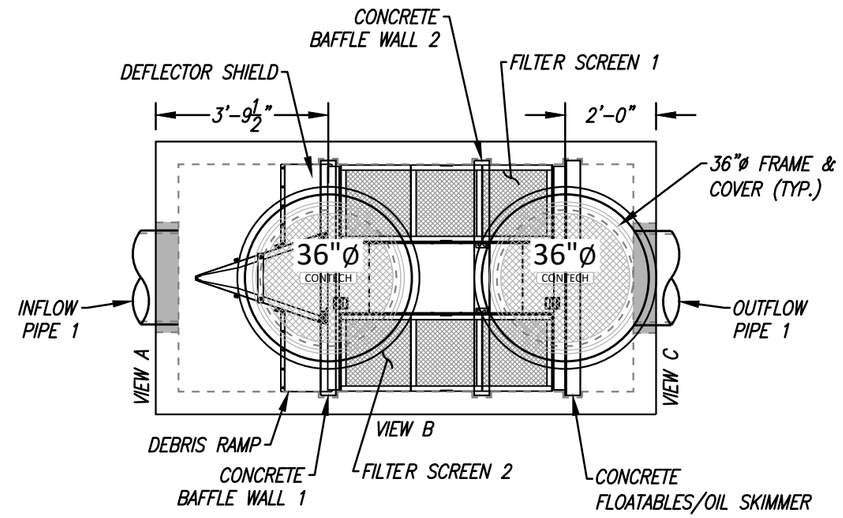

PLAN VIEW

GENERAL NOTES

1. CONTECH TO PROVIDE ALL MATERIALS UNLESS OTHERWISE NOTED.
2. ALL DIMENSIONS, ELEVATIONS, SPECIFICATIONS, AND CAPACITIES ARE SUBJECT TO CHANGE. FOR PROJECT SPECIFIC DRAWINGS DETAILING EXACT DIMENSIONS, WEIGHTS, AND ACCESSORIES PLEASE CONTACT CONTECH.

INSTALLATION NOTES

1. CONTRACTOR TO PROVIDE ALL LABOR, EQUIPMENT, MATERIALS, AND INCIDENTALS REQUIRED TO OFFLOAD AND INSTALL THE DEBRIS SEPARATING BAFFLE BOX AND APPURTENANCES IN ACCORDANCE WITH THIS DRAWING AND THE MANUFACTURER'S SPECIFICATIONS, UNLESS OTHERWISE STATED IN MANUFACTURER'S CONTRACT.
2. MANUFACTURER RECOMMENDS A 6" LEVEL ROCK BASE UNLESS SPECIFIED BY THE PROJECT ENGINEER. CONTRACTOR IS RESPONSIBLE FOR VERIFYING PROJECT ENGINEER'S RECOMMENDED BASE SPECIFICATIONS.
3. ALL PIPES MUST BE FLUSH WITH INSIDE SURFACE OF CONCRETE (PIPES CANNOT INTRUDE BEYOND FLUSH).
4. ALL GAPS AROUND PIPES SHALL BE SEALED WATERTIGHT WITH A NON-SHRINK GROUT PER MANUFACTURER'S STANDARD CONNECTION DETAIL AND SHALL MEET OR EXCEED REGIONAL PIPE CONNECTION STANDARDS.
5. CONTRACTOR RESPONSIBLE FOR INSTALLATION OF ALL PIPES, RISERS AND COVERS. ALL COVERS SHALL BE SHIPPED LOOSE. CONTRACTOR TO USE GROUT AND/OR BRICKS TO MATCH COVERS WITH FINISHED SURFACE UNLESS SPECIFIED OTHERWISE.

1:40 SCALE

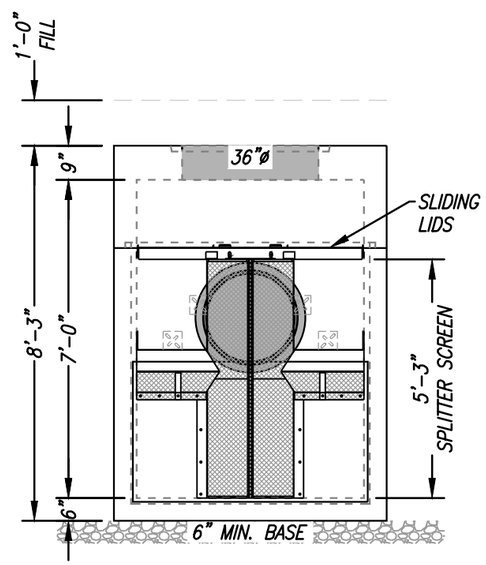

INLET ELEVATION VIEW A

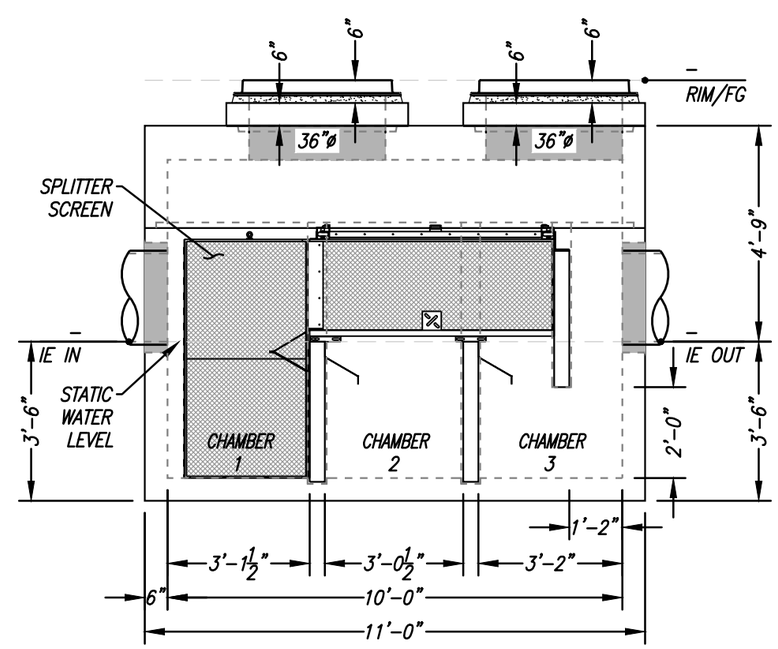

ELEVATION VIEW B

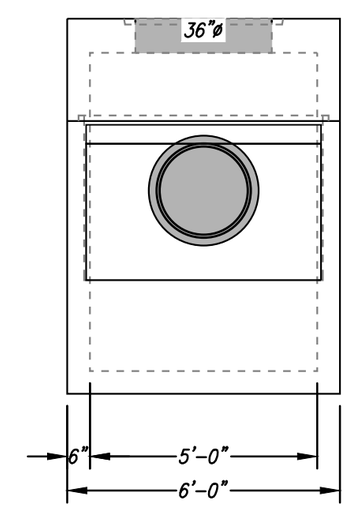

OUTLET ELEVATION VIEW C

THIS PRODUCT MAY BE PROTECTED BY ONE OR MORE OF THE FOLLOWING US PATENTS: 6,428,692; 7,294,256; 7,846,327; 7,153,417; 7,270,747. RELATED FOREIGN PATENTS OR OTHER PATENTS PENDING

PROPRIETARY AND CONFIDENTIAL:

THE INFORMATION CONTAINED IN THIS DOCUMENT IS THE SOLE PROPERTY OF CONTECH AND ITS COMPANIES. THIS DOCUMENT, NOR ANY PART THEREOF, MAY BE USED, REPRODUCED OR MODIFIED IN ANY MANNER WITH OUT THE WRITTEN CONSENT OF CONTECH.

CONTECH ENGINEERED SOLUTIONS LLC
www.ContechES.com

DSBB-5-10-84
DUAL STAGE HYDRODYNAMIC SEPARATOR
STANDARD DETAIL

7/18/23SCOTT.SERTICH